DST DUAL Fastener 30x10

1-044DST

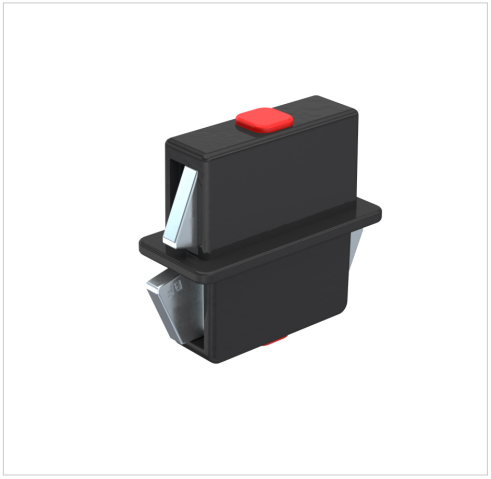

Advantages

- With DIRAK-SNAP-Technology for joining flat metal sheets.
- For cutout 30x10.
- Tool-less installation.
- In order to provide a tolerance for installation, one half of the housing is just 28mm long.
- Vibration-proof.

Material

- **Housing:** zinc die, black or PA black
- **Snap wedges:** sintered steel, zinc plated

Remarks

1. installation

Fastener, black

Product number	Material	Clamping range (S)	Clamping range (S) 2	Installation type	Delivery Unit
294-9102.52-10010	PA	0.7 - 1.2 mm	0.7 mm - 1.2 mm	tool-less	10 pcs.
294-9102.52-20020	PA	1.7 - 2.2 mm	1.7 mm - 2.2 mm	tool-less	10 pcs.
294-9102.52-15015	PA	1.2 - 1.7 mm	1.2 mm - 1.7 mm	tool-less	10 pcs.
294-9102.52-25025	PA	2.2 - 2.7 mm	2.2 mm - 2.7 mm	tool-less	10 pcs.
294-9102.52-30030	PA	2.7 - 3.2 mm	2.7 mm - 3.2 mm	tool-less	10 pcs.
294-9107.33-10010	zinc die	0.7 - 1.2 mm	0.7 mm - 1.2 mm	tool-less	10 pcs.
294-9107.33-15015	zinc die	1.2 - 1.7 mm	1.2 mm - 1.7 mm	tool-less	10 pcs.
294-9107.33-20020	zinc die	1.7 - 2.2 mm	1.7 mm - 2.2 mm	tool-less	10 pcs.
294-9107.33-25025	zinc die	2.2 - 2.7 mm	2.2 mm - 2.7 mm	tool-less	10 pcs.
294-9107.33-30030	zinc die	2.7 - 3.2 mm	2.7 mm - 3.2 mm	tool-less	10 pcs.

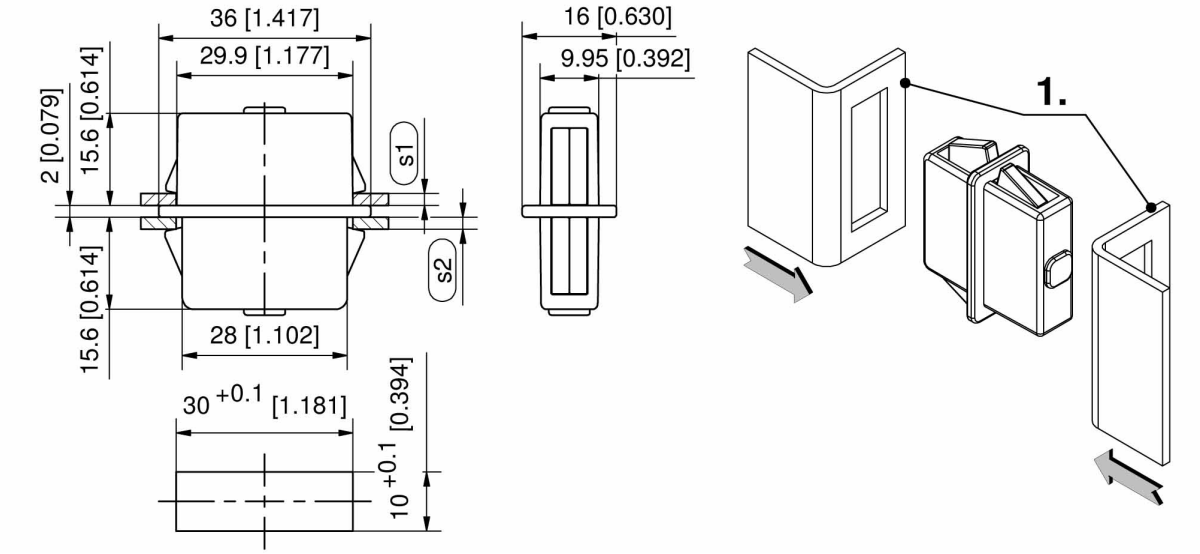
36 [1.417]
29.9 [1.177]
2 [0.079]
15.6 [0.614]
15.6 [0.614]
s1
s2
28 [1.102]
30 +0.1 [1.181]
10 +0.1 [0.394]
16 [0.630]
9.95 [0.392]
1.