DST Fastener 30x14

1-043DST



Advantages

- With DIRAK-SNAP-Technology for joining flat metal sheets.
- For cutout 30x14.
- Tool-less installation.
- Simple clip-in into its cutouts.
- The riveted grounding clip assures an electrical connection between the sheets and the fastener itself.
- Seismic-proof according to GR-63-CORE, Issue 4.
- Vibration-proof according to DIN EN 61373.
- The teeth of the riveted grounding clip penetrate the painted edge of the cutouts.
- By using the tool for uninstallation 292-0311.15 a disassembly from the front is possible.

Material

- **Housing:** zinc die, black
- **Snap wedges:** sintered steel, zinc plated
- **Grounding clip:** stainless steel

Remarks

1. and 2. uninstallation
3. grounding clip

The (S) dimension indicates the total thickness of the sheet metal panels

Fastener

Product number	Clamping range (S)	Installation type	Delivery Unit
294-9003.00-00034	3.0 - 3.7 mm	tool-less	10 pcs.
294-9003.00-00043	4.0 - 4.5 mm	tool-less	10 pcs.
294-9003.00-00052	5.0 - 5.5 mm	tool-less	10 pcs.

Product number	Clamping range (S)	Installation type	Delivery Unit
294-9003.00-00063	6.0 - 6.5 mm	tool-less	10 pcs.

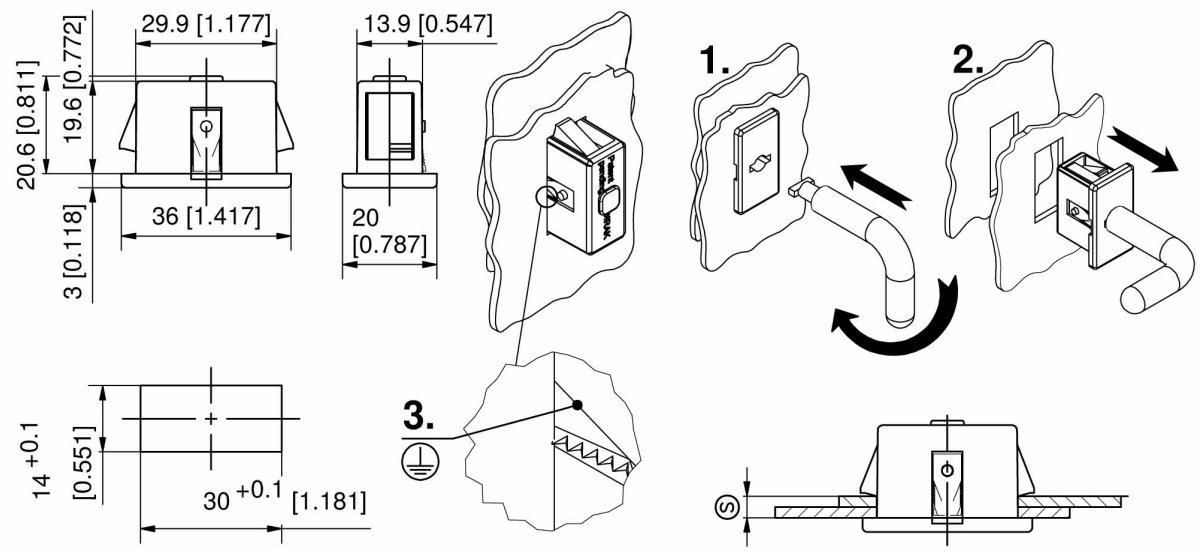
29.9 [1.177]
13.9 [0.547]
20.6 [0.811]
19.6 [0.772]
36 [1.417]
20
[0.787]
3 [0.118]
1.
2.
3.
14 +0.1
[0.551]
30 +0.1 [1.181]
S