DST Captive Fastener ☐9.5

1-041.06DST



Advantages

- With DIRAK-SNAP-Technology for joining of flat metal sheets and securely latching doors and covers.
- For cutout ☐9.5.
- Meets machinery directive 2006/42EC.
- After pre-assembly no losing, dropping or misplacing possible.
- Held securely in the cutout.
- Seismic-proof according to GR-63-CORE, Issue 4.
- Vibration-proof according to DIN EN 61373.
- Tool-less installation.
- Operation by Phillips H2. Opening by a ¼ turn of the insert.
- One-piece.

Material

- **Housing:** zinc die, untreated
- **SNAP wedges:** sintered steel, zinc plated
- **Insert:** zinc die, untreated
- **Springs:** spring steel

Remarks

Removal: by turning the screwdriver counterclockwiese, the SNAP wedges (3.) are retracted. The leaf spring (1.) pushes the fastener out of the rear panel, however, the U-shaped spring (2.) holds the fastener captive in the front panel. (4.) Cutout in the rear panel can also be an ablong hole for tolerance adjustment. (5.) Cutout front panel.
The (S) dimension indicates the total thickness of the sheet metal panels.

Fastener with insert Phillips H2

	Product number	Clamping range (S)	Dimension X	Installation type	Delivery Unit
a)	294-9112.00-00017	1.5 - 2.0 mm	11 mm	tool-less	10 pcs.
a)	294-9112.00-00026	2.5 - 2.8 mm	11 mm	tool-less	10 pcs.
a)	294-9112.00-00030	2.9 - 3.2 mm	11 mm	tool-less	10 pcs.
a)	294-9112.00-00034	3.3 - 3.6 mm	11 mm	tool-less	10 pcs.
a)	294-9112.00-00042	4.1 - 4.4 mm	11 mm	tool-less	10 pcs.
b)	294-9118.00-00037	3.5 - 4.0 mm	13 mm	tool-less	10 pcs.
b)	294-9118.00-00046	4.5 - 4.8 mm	13 mm	tool-less	10 pcs.

	Product number	Clamping range (S)	Dimension X	Installation type	Delivery Unit
b)	294-9118.00-00050	4.9 - 5.2 mm	13 mm	tool-less	10 pcs.
b)	294-9118.00-00054	5.3 - 5.6 mm	13 mm	tool-less	10 pcs.
b)	294-9118.00-00062	6.1 - 6.4 mm	13 mm	tool-less	10 pcs.

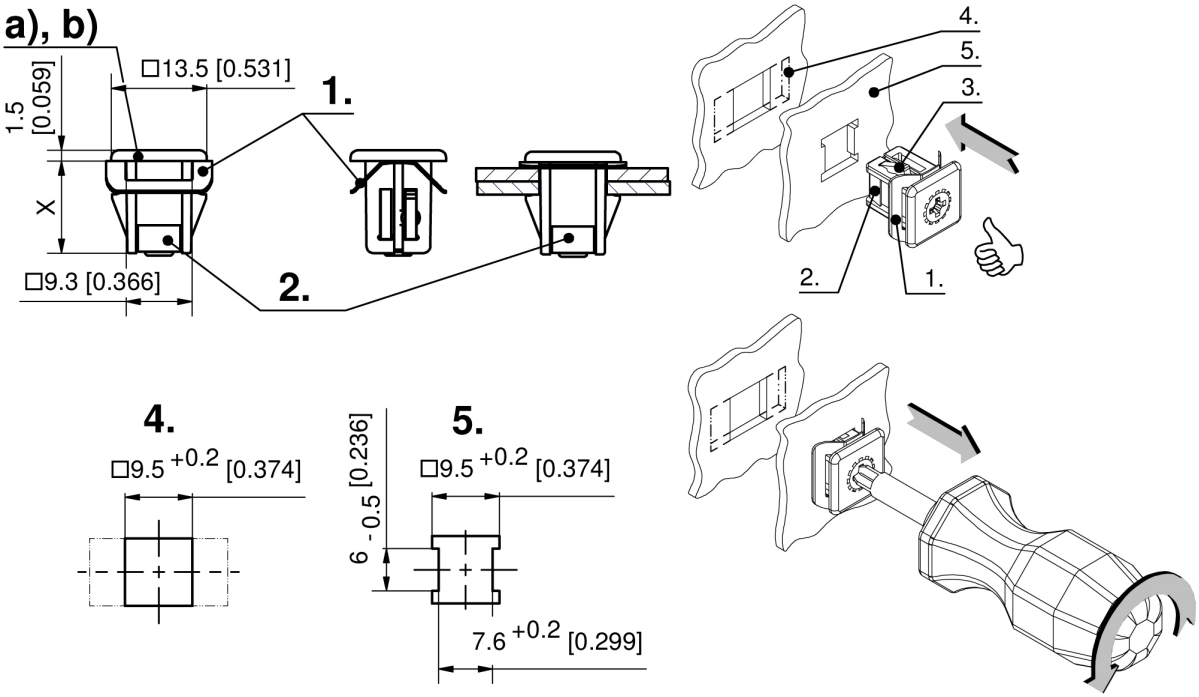
a), b)
□13.5 [0.531]
1.5 [0.059]
X
□9.3 [0.366]
1.
2.
4.
5.
3.
2.
1.
4.
□9.5 +0.2 [0.374]
5.
□9.5 +0.2 [0.374]
6 - 0.5 [0.236]
7.6 +0.2 [0.299]