DST Fastener □9.5 with Leaf Spring



1-041.05DST

Advantages

- With DIRAK-SNAP-Technology for joining sheet metal panels.
- For cutout □9.5.
- Vibration-proof.
- Tool-less installation.
- This fastener can be disengaged from the front of the panel using a Phillips H2 screwdriver.
- Sheet metal panels are easily joined by manually pressing the fastener through the panel cutout.
- One piece.

Material

- **Housing:** zinc die, untreated
- **SNAP wedges:** sintered steel, zinc plated
- **Leaf spring:** stainless steel
- **Insert:** zinc die, untreated

Remarks

1. leaf spring
2. SNAP wedges
3. cutout rear panel, also possible as oblong hole for tolerance adjustment.
4. cutout front panel

Removal: by turning the screwdriver counterclockwise, the SNAP wedges are retracted. The leaf spring pushes the fastener out of rear panel. The (S) dimension indicates the total thickness of the sheet metal panels.

Delivery time on request!

Fastener with insert Phillips H2, with leaf spring

	Product number	Clamping range (S)	Dimension X	Installation type	Delivery Unit
a)	294-9113.00-00017	1.5 - 2.0 mm	11 mm	tool-less	on request
a)	294-9113.00-00026	2.5 - 2.8 mm	11 mm	tool-less	10 pcs.
a)	294-9113.00-00030	2.9 - 3.2 mm	11 mm	tool-less	10 pcs.
a)	294-9113.00-00034	3.3 - 3.6 mm	11 mm	tool-less	10 pcs.
a)	294-9113.00-00042	4.1 - 4.4 mm	11 mm	tool-less	on request
b)	294-9119.00-00037	3.5 - 4.0 mm	13 mm	tool-less	10 pcs.
b)	294-9119.00-00046	4.5 - 4.8 mm	13 mm	tool-less	on request

	Product number	Clamping range (S)	Dimension X	Installation type	Delivery Unit
b)	294-9119.00-00050	4.9 - 5.2 mm	13 mm	tool-less	10 pcs.
b)	294-9119.00-00054	5.3 - 5.6 mm	13 mm	tool-less	on request
b)	294-9119.00-00062	6.1 - 6.4 mm	13 mm	tool-less	10 pcs.

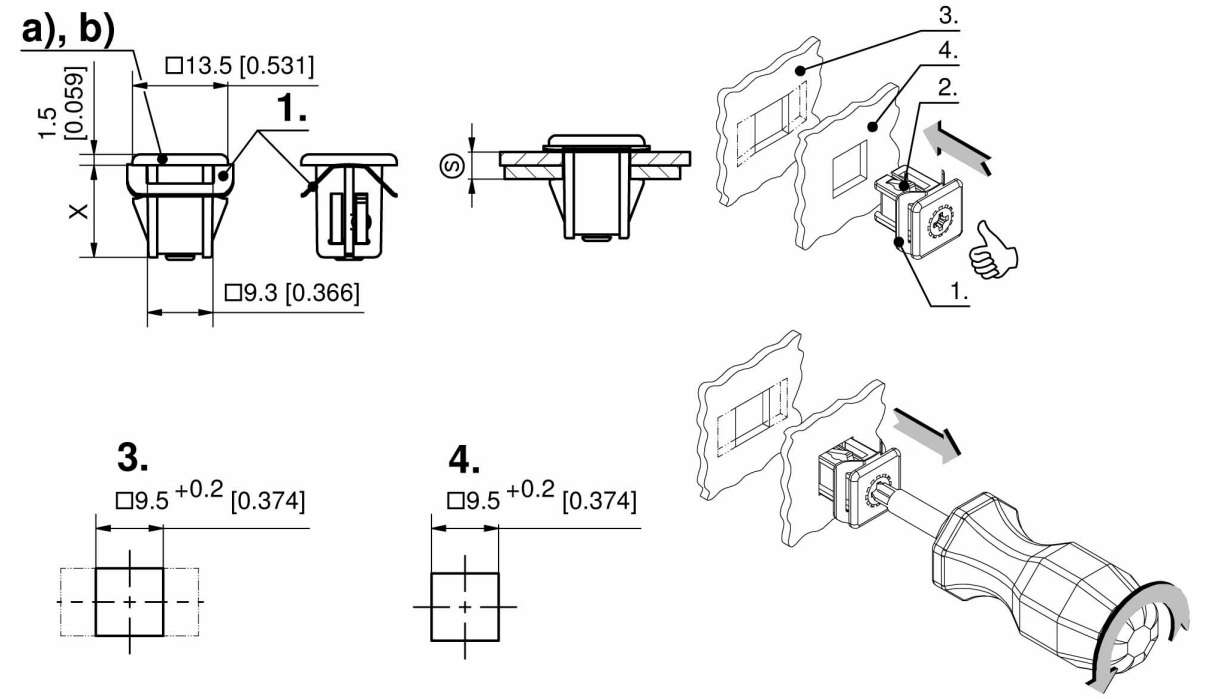
a), b)
□13.5 [0.531]
1.5 [0.059]
1.
X
□9.3 [0.366]
S
3.
4.
2.
1.
3.
□9.5 +0.2 [0.374]
4.
□9.5 +0.2 [0.374]