Grounding Countersunk Screw with Segment Cutting Edge and Scraping Tooth

6-044

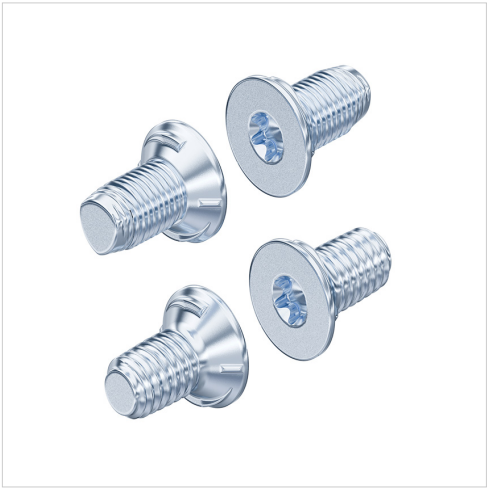

Advantages

- Grounding is implemented by segment cutting edge (2.) or scraping tooth (3.).
- Tested according to DIN EN 61439-1 (VDE 0660 part 600): 2012-06 "Low Voltage Switchgear Combinations".
- Sliding coating ensures low screw-in torques.
- Hexagon socket drive in accordance with DIN EN ISO 10664 no. 30 (4.).
- **a)** metric thread M6.
- **b)** metric thread cutting screw M6 according to DIN 7500. (1.)
- DIRAK screws are shaped for applications without a nut thread so that they cut a metric nut thread.
- The counter thread is formed due to the non-circular cross-section and the slightly conical design.

Material

- **Screw:** steel (10B21), strength 8.8 ISO898, zinc plated, sliding coated

Remarks

5. embossing at a cylindrical hole for flush surface.

Please request our data sheet with detailed technical information.

Grounding countersunk screws

	Product number	Version	Dimension	Delivery Unit
a)	800-9001.00-00000	metric thread	M6 x 12	100 pcs.
b)	800-9002.00-00000	metric thread cutting	Ø6 x 12	100 pcs.

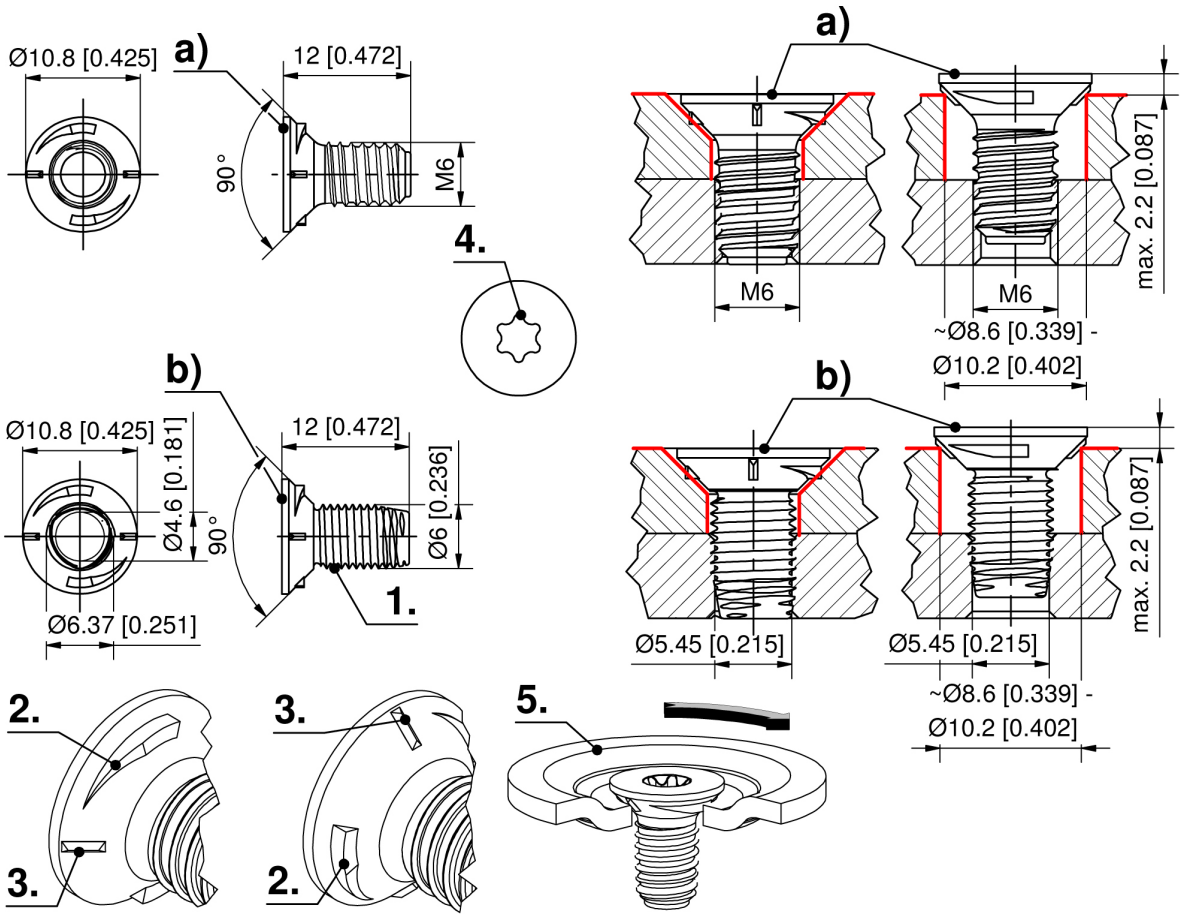
Ø10.8 [0.425]
a)
12 [0.472]
90°
M6
4.
a)
M6
M6
max. 2.2 [0.087]
~Ø8.6 [0.339] -
Ø10.2 [0.402]
b)
Ø10.8 [0.425]
Ø4.6 [0.181]
90°
12 [0.472]
Ø6 [0.236]
1.
Ø6.37 [0.251]
b)
Ø5.45 [0.215]
Ø5.45 [0.215]
max. 2.2 [0.087]
~Ø8.6 [0.339] -
Ø10.2 [0.402]
2.
3.
3.
2.
5.