Screw Assembly for Terminal Box Cover

6-043

IP 66 RoHS WEEE



Advantages

- Screw assembly consists of a) raised countersunk M5x30 Phillips H2 screw and b) sleeve.
- Meets IP66 certification (applicable for installation example shown below with even compression of the foam/glued seal).
- Captive by using o-ring 839-3770.00-00412.

Material

- **Screw:** steel, zinc plated
- **Sleeve:** TPV Santoprene, black
- **O-ring:** NBR, black

Remarks

Raised countersunk screw a) and sleeve b) have to be ordered together.

Additional lengths and materials of the screw available on request.

Screw assembly

	Product number	Name	Material	Surface	Delivery Unit
a)	202-1103.15-00530	Raised countersunk screw, M5x30	steel	zinc plated	50 pcs.
b)	203-0655.61-00000	Sleeve	TPV Santoprene	black	50 pcs.

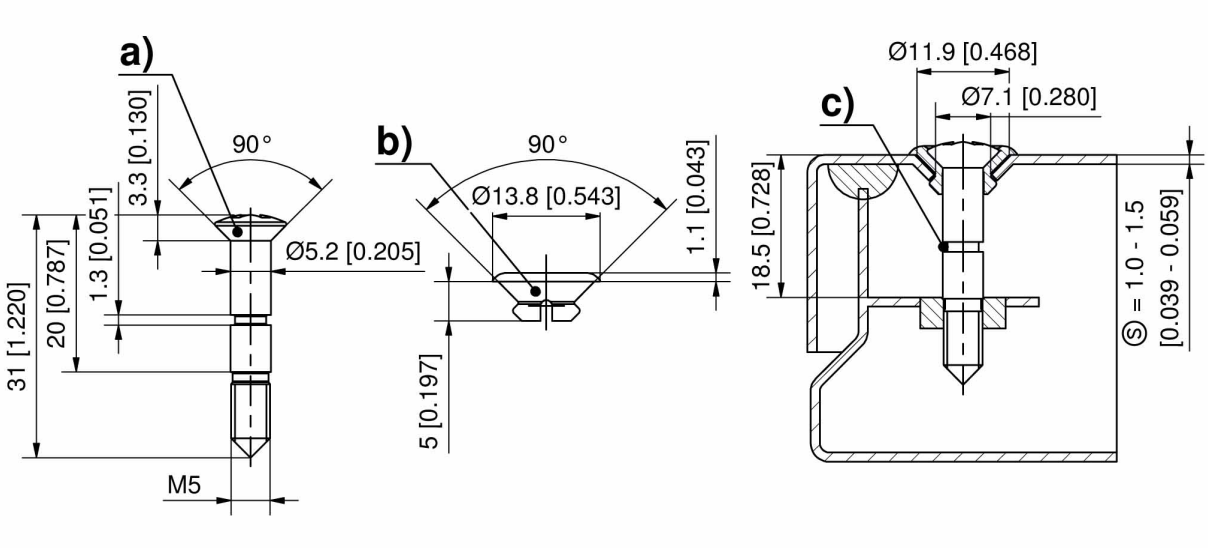
a)
90°
3.3 [0.130]
1.3 [0.051]
Ø5.2 [0.205]
31 [1.220]
20 [0.787]
M5
b)
90°
Ø13.8 [0.543]
1.1 [0.043]
5 [0.197]
c)
Ø11.9 [0.468]
Ø7.1 [0.280]
18.5 [0.728]
Ⓢ = 1.0 - 1.5
[0.039 - 0.059]