ParagonLED®

Socket LED Module

G2.1

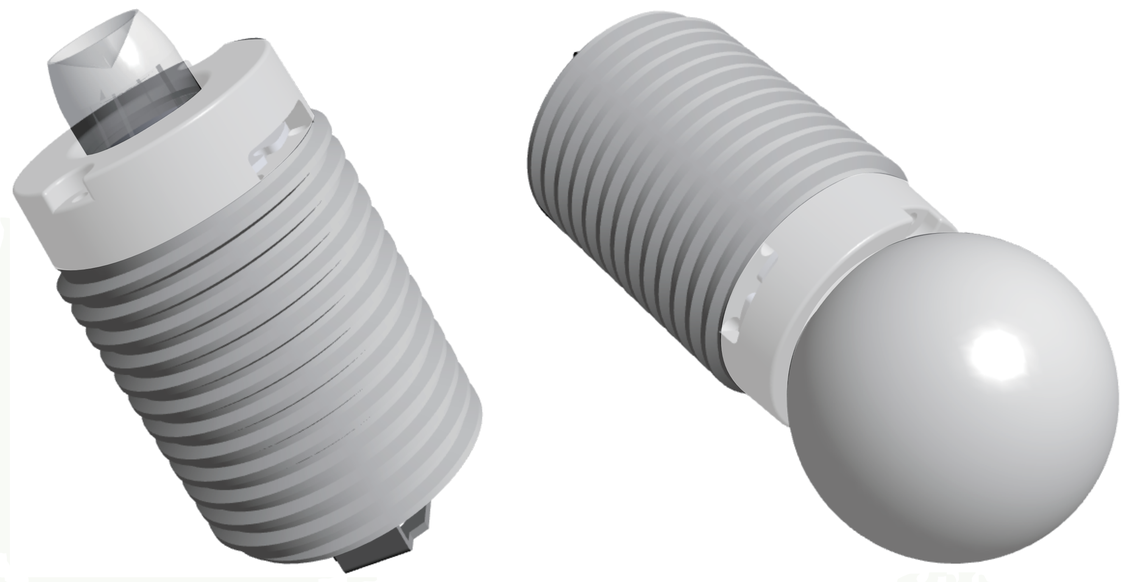

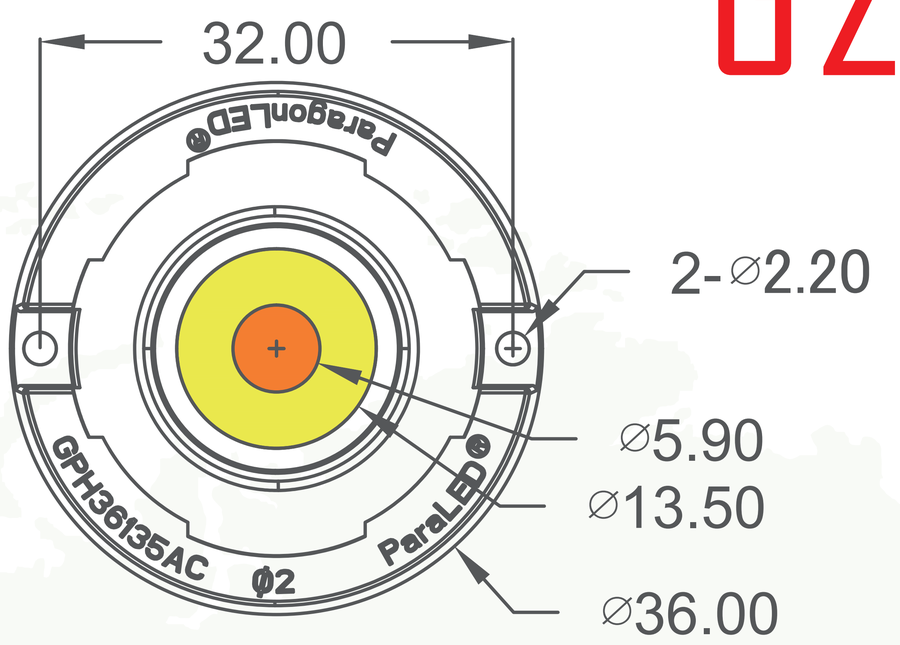

- Damp Location
- Dimmable
- 5VA Plastic Socket
- CCT changable
- UL E355751

- Patent No
  US 8421373B2 / 8672517B2 / 8876334
  EU 2020131056545 / 10165723.7 / 1066011.6

Specification

Watts (W)	Dimmable	Driving Condition (AC/DC)	Volts (V)	External Surge (KV)	Hi-Pot (KV)	EMC	Ra80 Lumen	Ra90 Lumen	Color Tempreature (CCT)	*Transient Protection* (KV)
4	Dimmable	AC	120V/230V	0.5KV	4KV	Pass	300	260	3000	2.5kv
6	Dimmable	AC	120V/230V	0.5KV	4KV	Pass	450	390	3000	2.5kv
8	Dimmable	AC	120V/230V	0.5KV	4KV	Pass	600	520	3000	2.5kv
10	Dimmable	AC	120V/230V	0.5KV	4KV	Pass	750	650	3000	2.5kv
12	Dimmable	AC	120V/230V	0.5KV	4KV	Pass	900	800	3000	2.5kv

* With external SPD

Dimension

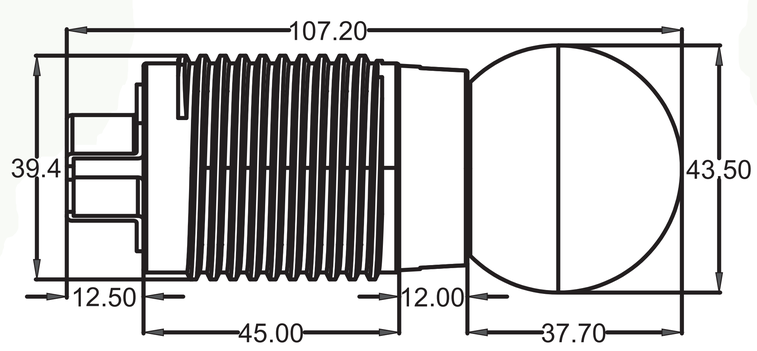

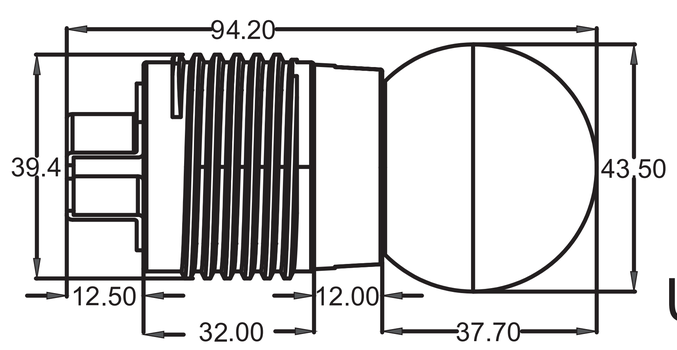

Unit:mm

Application