ParagonLED®

Socket LED Module

G2.2

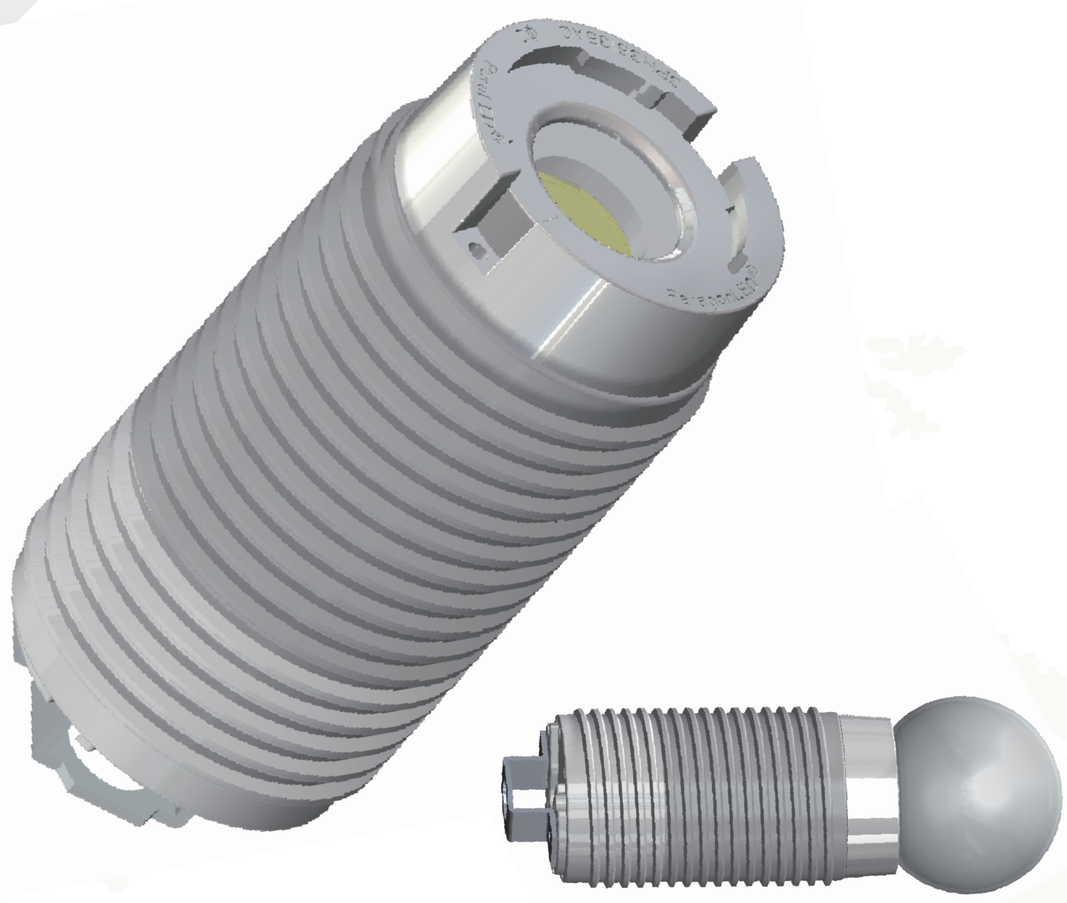

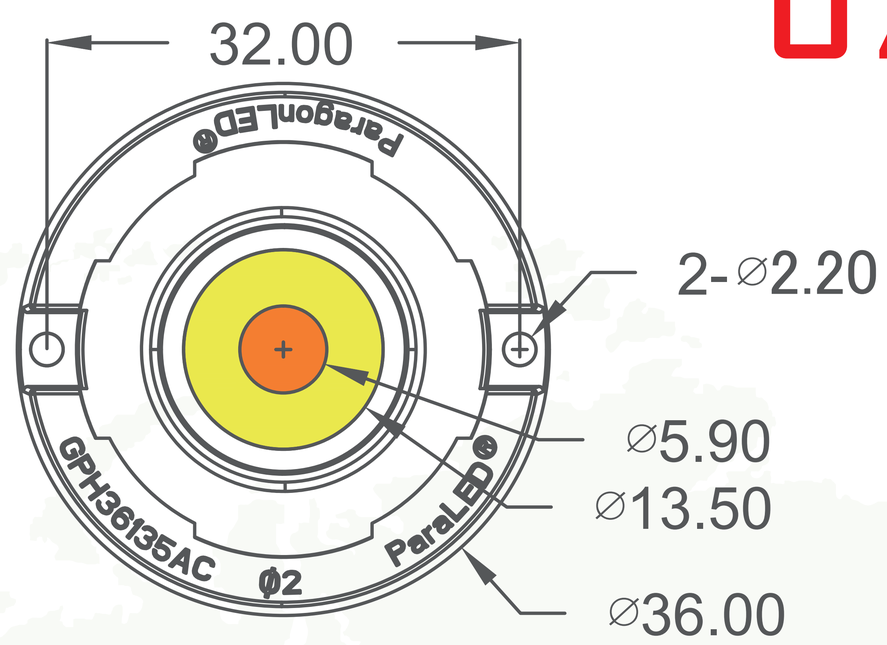

- Pass T24
- Damp Location
- Dimmable
- 5VA Socket cap
- CCT changable

Specification

Watts (W)	Dimmable	Driving Condition (AC/DC)	Volts (V)	External Surge (KV)	Hi-Pot (KV)	EMC	Ra80 Lumen	Ra90 Lumen	Flicker	*Transient Protection* (KV)
12	Dimmable	AC	120V/230V	0.5KV	4KV	Pass	900	800	<30%	2.5kv

Dimension

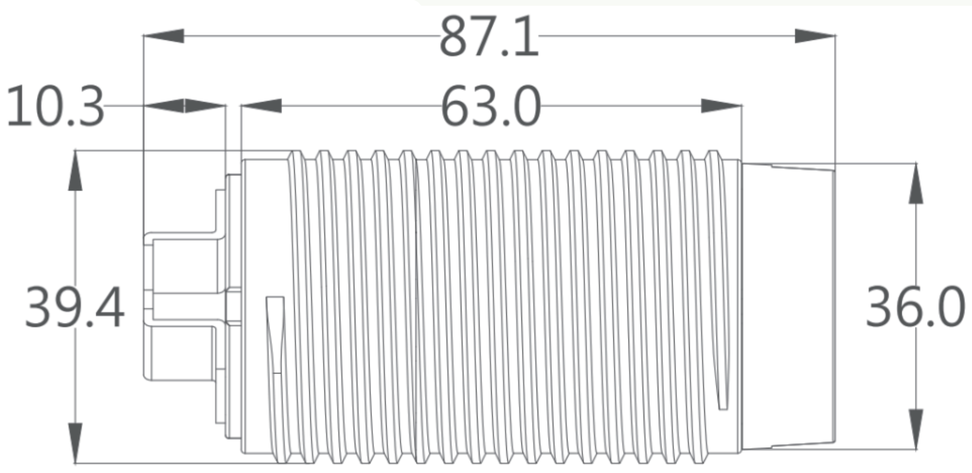

Unit:mm

Application