LEVEL TRANSMITTER <SANITARY TYPE>

DATA SHEET

FKE···5

The FCX-AIII level transmitter accurately measures liquid level and transmits a proportional 4 to 20mA signal. The transmitter utilizes a unique micromachined capacitance silicon sensor with state-of-the-art microprocessor technology to provide exceptional performance and functionality.

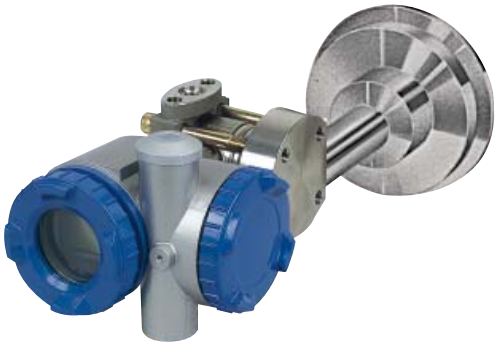

FEATURES

1. **High accuracy**
   0.2% accuracy for all calibrated spans is a standard feature for all models covering 0.32kPa {3.2mbar} range to 500kPa {5bar} high differential pressure range. 0.1% accuracy is available as option. Fuji's micro-capacitance silicon sensor assures this accuracy for all elevated or suppressed calibration ranges without additional adjustment.
2. **Minimum environmental influence**
   The "Advanced Floating Cell" design which protects the pressure sensor against changes in temperature, static pressure, and overpressure substantially reduces total measurement error in actual field applications.
3. **Fuji/HART® bilingual communications protocol and FOUNDATION™ fieldbus and Profibus™ compatibility**
   FCX-AIII series transmitter offers bilingual communications to speak both Fuji proprietary protocol and HART®. Any HART® compatible devices can communicate with FCX-AIII.
   Further, by upgrading electronics FOUNDATION™ fieldbus and Profibus™ are also available.
4. **Application flexibility**
   Various options that render the FCX-AIII suitable for almost any process applications include:
   – Built-in RFI filter and lightning arrester
   – 5-digit LCD meter with engineering unit
   – Stainless steel electronics housing
   – Wide selection of materials
   – High temperature, high vacuum service.
5. **Programmable output Linearization Function**
   Output signal can be freely programmable.
   (Up to 14 compensated points at approximation.)
6. **Burnout current flexibility (Under Scale: 3.2 to 4.0mA, Over Scale: 20.0 to 21.6mA)**
   Burnout signal level is adjustable using Model FXW Hand Held Communicator (HHC) to comply with NAMUR NE43.
7. **Dry calibration without reference pressure**
   Thanks to the best combination of unique construction of mechanical parts (Sensor unit) and high performance electronics circuit (Electronics unit), reliability of dry calibration without reference pressure is at equal level as wet calibration.

SPECIFICATIONS

Functional specifications

Service: Liquid, gas, or vapour

Static pressure, span, and range limit:

Type	Static pressure	Span limit [kPa] {m bar} Min.	Span limit [kPa] {m bar} Max.	Range limit [kPa] {m bar}
FKE□□3	Up to flange rating	0.32 {3.2}	32 {320}	+/– 32 { +/– 320}
FKE□□5	Up to flange rating	1.3 {13}	130 {1300}	+/– 130 { +/– 1300}
FKE□□6	Up to flange rating	5 {50}	500 {5000}	+/– 500 { +/– 5000}

Remark: To minimize environmental influence, span should be greater than 1/40 of the max. span in most applications.

– Lower limit of static pressure (vacuum limit) ;
  Silicone fill sensor: See Fig.1
– The maximum span of each sensor can be converted to different units using factors as below.
  1MPa=10^3kPa=10bar=10.19716kgf/cm^2=145.0377psi
  1kPa=10mbar=101.9716mmH_2O=4.01463inH_2O

Overrange limit: To maximum static pressure limit

Output signal: 4 to 20mA DC with digital signal superimposed on the 4 to 20mA signal

Power supply: Transmitter operates on 10.5V to 45V DC at transmitter terminals.
10.5V to 32V DC for the units with optional arrester.

Load limitations: see figure below

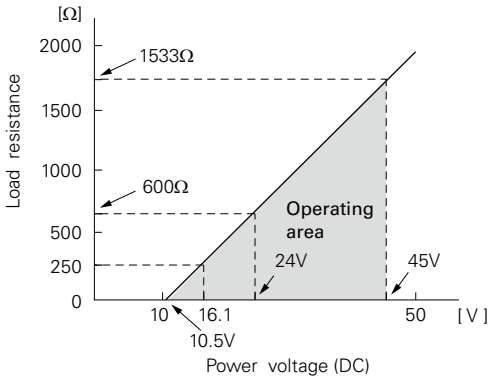

Note: For communication with HHC[1] (Model: FXW), min. of 250Ω required.

Zero/span adjustment:
Zero and span are adjustable from the HHC[1]. Zero and span are also adjustable externally from the adjustment screw (Span adjustment is not available with 9th digit code "L, P, Q, S").

Damping: Adjustable from HHC or local configurator unit with LCD display.
The time constant is adjustable between 0.06 to 32 seconds.

Zero elevation/suppression:
−100% to + 100% of URL

Normal/reverse action:
Selectable from HHC[1]

Indication: Analog indicator or 5-digit LCD meter, as specified.

Burnout direction: Selectable from HHC[1]
If self-diagnostic detect transmitter failure, the analog signal will be driven to either "Output Hold", "Output Overscale" or "Output Underscale" modes.

"Output Hold":
Output signal is hold as the value just before failure happens.

"Output Overscale":
Adjustable within the range 20.0mA to 21.6mA from HHC[1]

"Output Underscale":
Adjustable within the range 3.2mA to 4.0mA from HHC[1]

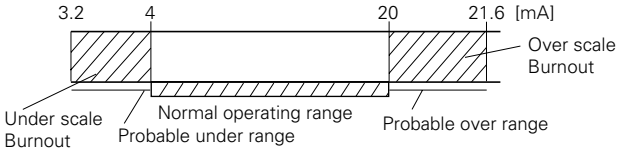

Loop-check output:
Transmitter can be configured to provide constant signal 3.2mA through 21.6mA by HHC[1].

Temperature limit:
Ambient: −40 to + 85°C
(−20 to + 80°C for LCD indicator)
(−40 to + 60°C for arrester option)

Process:

Fill fluid	Code in the 13th digit of "Code symbols"	Process temperature	Lower limit of static press
Silicone oil	G	−40 to 120°C	2.7kPa abs {20.3mmHg abs}

Storage: −40 to + 90°C

Humidity limit: 0 to 100% RH

Communication: With HHC[1] (Model FXW, consult Data Sheet No. EDS8-47), following items can be remotely displayed or configured.
Note: HHC's version must be higher than 7.0 (or FXW □□□□1−□4), for FCX-AⅢ.

Local configurator with LCD display (option):
Local configurator with 3 push button and LCD display can support following items.

Items	By communication with FXW		By local configurator (with 3 push button)	
	Display	Set	Display	Set
Tag No.	v	v	v	v
Model No.	v	v	v	v
Serial No. & Software Version	v	—	v	—
Engineering unit	v	v	v	v
Range limit	v	—	v	—
Measuring range	v	v	v	v
Damping	v	v	v	v
Output mode	v	—	v	—
Burnout direction	v	v	v	v
Calibration	v	v	v	v
Output adjust	—	v	—	v
Data	v	—	v	—
Self diagnoses	v	—	v	—
Printer (In case of FXW with printer option)	v	—	—	—
External switch lock	v	v	v	v
Transmitter display	v	v	v	v
Linearize	v	v	—	—
Rerange	v	v	v	v
Saturate current	v	v	v	v
Write protect	v	v	v	v
History				
– Calibration history	v	v	v	v
– Ambient temperature history	v	—	v	—

Programmable output linearization function:
Output signal can be characterized with "14 points linear approximation function" from HHC[1].

EMC Conformity: EN61326-1: 2006 CE

(Note) (1) HHC: Hand Held Communicator

Performance specifications

Reference conditions, silicone oil fill, 316SS isolating diaphragms, 4-20 mA analog output in linear mode.

Accuracy rating: (including linearity, hysteresis, and repeatability)

(Standard)

For spans greater than 1/10 of URL: ±0.2% of span

For spans below 1/10 of URL:

$$\pm\left(0.1 + 0.1\,\frac{0.1 \times \text{URL}}{\text{Span}}\right)\%\ \text{of span}$$

(Option) (Code: 21th digit H, K)

For span greater than 1/10 of URL: 0.1% of span

For span below 1/10 of URL:

$$\pm\left(0.05 + 0.05\,\frac{0.1 \times \text{URL}}{\text{Span}}\right)\%\ \text{of span}$$

Stability: ±0.2% of upper range limit (URL) for 3 years.

Temperature effect:

Effects per 28°C change between the limits of –40°C and + 85°C

(Standard) Zero shift: ±0.35% of URL

Total effect: ±0.5% of URL

(Option) (Code: 21th digit J, K)

Zero shift: ±0.3% of URL

Total effect: ±0.4% of URL

Static pressure effect:

Zero shift: ±0.2% of URL 1MPa

Span shift: –0.2% of calibrated span / 1MPa

Overrange effect: Zero shift; ±0.1% of URL for flange rating pressure

Supply voltage effect:

Less than 0.005% of calibrated span per 1V

Update rate: 60 msec

Step response: (without electrical damping)

Range code	Time constant (at 23°C)	Dead time
"3"	0.55 s	0.12 s
"5" and "6"	0.3 s	

Mounting position effect:

Zero shift, less than 0.3kPa {3m bar} for a 10° tilt in any plane. (No extension)

No effect on span.

This error can be corrected by adjusting zero.

Dielectric strength:

500V AC, 50/60Hz 1 min., between circuit and earth.

Insulation resistance:

More than 100MΩ at 500V DC.

Turn-on time: 4 sec

Internal resistance for external field indicator:

12Ω or less

Physical specifications

Electrical connections:

G1/2, 1/2-14 NPT, Pg13.5, or M20 x 1.5 conduit, as specified.

Process connections:

LP side: 1/4-18 NPT or Rc1/4.

HP side: IDF standard 4" clamp. See OUTLINE DIAGRAM for detailed dimensions.

Refer to "Code symbols"

Process-wetted parts material:

Material code (7th figure in "Code symbols")	LP side			HP side
	Process cover	Diaphragm	Wetted sensor body	Diaphragm & flange face
V	316 stainless steel (*1)	316L stainless steel	316 stainless steel	316L stainless steel

Note: (*1) SCS14A per JIS G 5121 (equivalent CF8M per ASTM A351/A351M)

Remark: Sensor O-rings: Viton O-ring and teflon gasket selectable.

Non-wetted parts material:

Electronics housing: Low copper die-cast aluminum alloy finished with polyester coating (standard), or 316 stainless steel (SCS14A per JIS G5121), as specified.

Bolts and nuts: Cr-Mo alloy (standard) or 304 stainless steel

Fill fluid: Silicone oil (standard)

Mounting flange: 316 stainless steel

Environmental protection:

IEC IP67 and NEMA 6 / 6P

Flange mounting: See drawings

Mass{weight}: Transmitter approximately 13kg without options.

Add; 0.5kg for mounting bracket

0.8kg for indicator option

4.5kg for stainless steel housing option

Optional features

Indicator: A plug-in analog indicator (2.5% accuracy) can be housed in the electronics compartment or in the terminal box of the housing.
An optional 5-digit LCD meter with engineering unit is also available.

Local configurator with LCD display:
An optional 5 digits LCD meter with 3 push buttons can support items as using communication with FXW.

Arrester: A built-in arrester protects the electronics from lightning surges.
Lightning surge immunity:
4kV (1.2 × 50μs)

Degreasing: Process-wetted parts are cleaned, but the fill fluid is standard silicone oil. Not for use on oxygen or chlorine measurement.

Optional tag plate:
An extra stainless steel tag with customer tag data is wired to the transmitter.

Coating of cell: Cell's surface is finished with epoxy/polyurethane double coating.
Specify if environment is extremely corrosive.

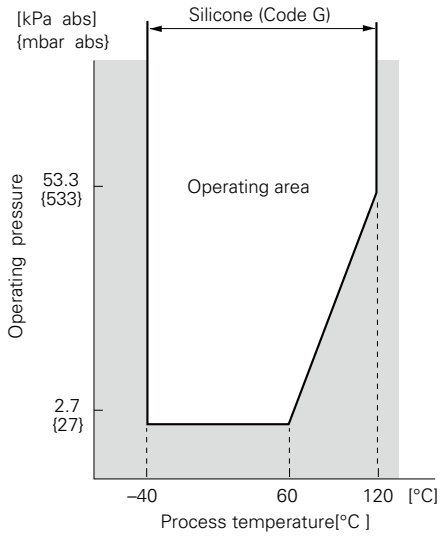

Fig. 1 Relation between process temperature and operating pressure

ACCESSORIES

Oval flanges: (Model FFP, refer to Data Sheet No. EDS6-128)
Converts process connection to 1/2-14 NPT or to Rc1/2; in carbon steel or in 316 stainless steel.

Hand held communicator:
(Model FXW, refer to Data Sheet No. EDS 8-47)

CODE SYMBOLS

1 2 3 4 5 6 7 8 9 10 11 12 13 14 15 21 ← Digit No. of code

F K E ☐ ☐ ☐ ☐ 5 - ☐ ☐ ☐ ☐ ☐ - ☐ ☐ - ☐

Digit	Description				Note	Code
4	<Connections>					
	<Process connection>	<Oval flange screw>	<Conduit connection>	<Case type>		
	Rc1/4	7/16-20UNF	G 1/2	T type		5
	1/4-18NPT	7/16-20UNF	1/2-14NPT	T type		6
	1/4-18NPT	M10	Pg13.5	T type		7
	1/4-18NPT	M10	M20×1.5	T type		8
	1/4-18NPT	7/16-20UNF	Pg13.5	T type		9
	Rc1/4	7/16-20UNF	G 1/2	L type		S
	1/4-18NPT	7/16-20UNF	1/2-14NPT	L type		T
	1/4-18NPT	M10	Pg13.5	L type		V
	1/4-18NPT	M10	M20×1.5	L type		W
	1/4-18NPT	7/16-20UNF	Pg13.5	L type		X
5	<Mounting flange>					
	Material	Size and rating				
	316 stainless	IDF standard 4" clamp				L
6	<Span limit (*1) [kPa] {m bar}>				Note 1	
	0.32 ----- 32 {3.2 ------ 320}					3
	1.3 ------ 130 {13 ------ 1300}					5
	5 -------- 500 {50 ------ 5000}					6
7	<Material>					
	LP side			HP side		
	Process cover	Diaphragm	Wetted sensor body	Diaphragm and flange face		
	316 stainless steel	316L stainless steel	316 stainless steel	316L stainless steel		V
9	<Indicator and arrester>					
	Indicator	Arrester				
	None	None				A
	Analog, 0 to 100% linear scale	None				B
	Analog, custom scale	None				D
	None	Yes				E
	Analog, 0 to 100% linear scale	Yes				F
	Analog, custom scale	Yes				H
	Digital, 0 to 100% linear scale	None				L
	Digital, custom scale	None				P
	Digital, 0 to 100% linear scale	Yes				Q
	Digital, custom scale	Yes				S
	Digital, 0 to 100% linear scale (Local configurator unit with LCD display)	None				1
	Digital, custom scale (Local configurator unit with LCD display)	None				2
	Digital, 0 to 100% linear scale (Local configurator unit with LCD display)	Yes				4
	Digital, custom scale (Local configurator unit with LCD display)	Yes				5
10	<Approvals for hazardous locations>					
	None (for ordinary locations)					A
11	<Diaphragm extension [mm]>					
	Extension [mm]					
	0					Y
12	<Options>					
	Extra SS tag plate	Stainless steel elec. housing	Coating of cell			
	None	None	None		Note 2	Y
	Yes	None	None			B
	None (*2)	None	Yes			M
	Yes	None	Yes			N
	None	Yes	Yes			P
	Yes	Yes	Yes			Q
13	<Special applications and fill fluid>					
	Treatment	Fill fluid				
	Degreasing	Silicone oil				G

Note 1: (*1) 100: 1 turn down is possible, but should be used at a span greater than 1/40 of the maximum span for better performance.

Note 2: (*2) Customer tag number can be engraved on standard stainless steel name plate. If extra tag plate is required, select "Yes".

Digit	Description		Note	1 2 3 4 5 6 7 8	9 10 11 12 13	14 15	21
				F K E	5 -	-	-
14	<O-ring, gasket>						
	O-ring / Gasket						
	Teflon (gasket)					B	
15	<Bolt/nut> (*3)						
	Cr-Mo alloy hexagon socket head cap screw/carbon steel nut		Note 3			A	
	Cr-Mo alloy hexagon bolt/nut					B	
	304 stainless steel bolt / nut					E	
21	<Other options>						
	High accuracy type	Instruction manual attached	Note 4				H
	Low temperature effect type	Instruction manual attached					J
	H+J	Instruction manual attached					K
	Opposite Vent/Drain Plug Position	Instruction manual attached					C
	Instruction manual unattached						L
	High accuracy type	Instruction manual unattached					T
	Low temperature effect type	Instruction manual unattached					U
	T+U	Instruction manual unattached					V
	Opposite Vent/Drain Plug Position	Instruction manual unattached					P

Digit No. of code

Note 3: (*3) In case of tropical use, select stainless bolts and nuts.
Note 4: If other option is not necessary, 21st digit code is blank.

ORDERING INFORMATION

When ordering this instrument, specify:

1. CODE SYMBOLS
2. Measuring range
3. Output orientation (burnout direction) when abnormality is occurred in the transmitter.
   Hold / Overscale / Underscale.
   Unless otherwise specified, output hold function is supplied.
4. Indication method (indicated value and unit) in case of the actual scale (code D, H, P, S on 9th digit).
5. TAG No. (up to 14 alphanumerical characters), if required.

OUTLINE DIAGRAM (Unit:mm)

<Amp. case: T type>

4th digit of the code symbols	conduit conn.			Press. Conn.	Oval flange screw
	D	E	F	H	
5	G1/2	18	2	Rc 1/4	7/16-20UNF SCREW DEPTH15
6	1/2-14NPT	16	4	1/4-18NPT	7/16-20UNF SCREW DEPTH15
7	Pg13.5	10.5	4.5	1/4-18NPT	M10 SCREW DEPTH15
8	M20×1.5	16	4	1/4-18NPT	M10 SCREW DEPTH15
9	Pg13.5	10.5	4.5	1/4-18NPT	7/16-20UNF SCREW DEPTH15

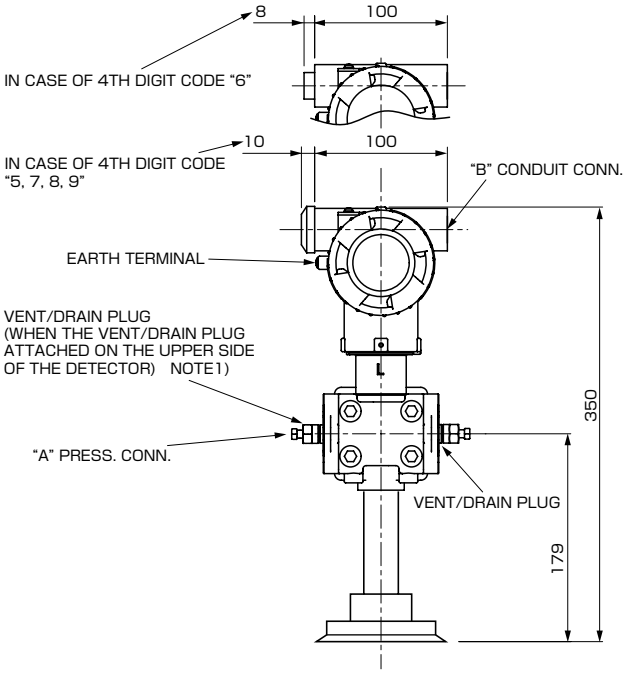

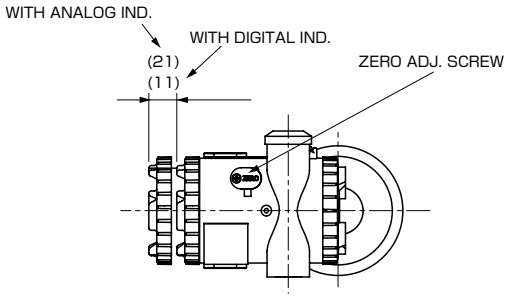

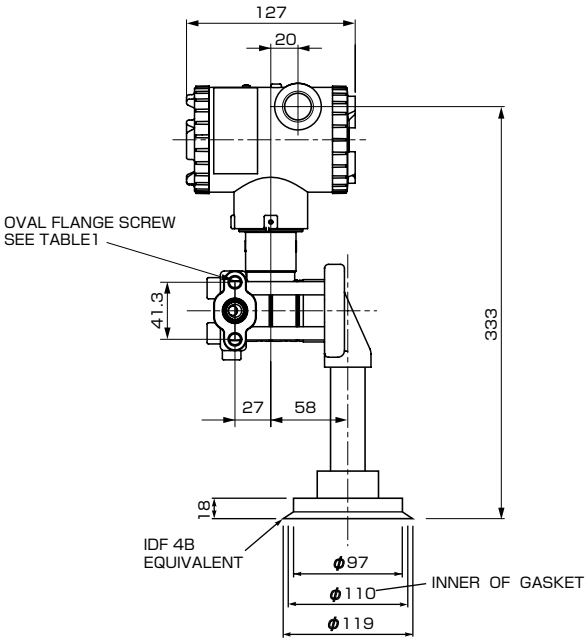

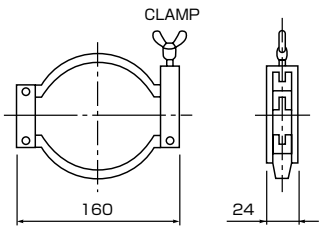

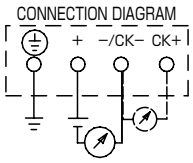

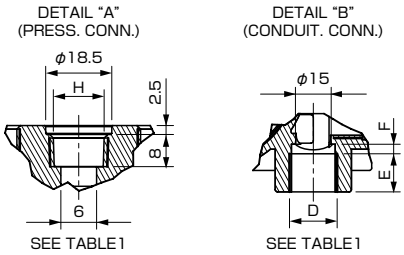

NOTE1) THE PRESSURE CONNECTOR IS LOCATED ON THE DOWN SIDE SURFACE OF THE DETECTOR, WHEN THE VENT/DRAIN PLUG IS ATTACHED ON THE UPPER SIDE OF THE DETECTOR (WHEN THE 21ST DIGIT OF THE CODE SYMBOLS : C,P).

OUTLINE DIAGRAM (Unit:mm)

<Amp. case: L type>

4th digit of the code symbols	conduit conn.			Press. Conn.	Oval flange screw
	D	E	F	H	
S	G1/2	18	2	Rc 1/4	7/16-20UNF SCREW DEPTH15
T	1/2-14NPT	16	4	1/4-18NPT	7/16-20UNF SCREW DEPTH15
V	Pg13.5	10.5	4.5	1/4-18NPT	M10 SCREW DEPTH15
W	M20×1.5	16	4	1/4-18NPT	M10 SCREW DEPTH15
X	Pg13.5	10.5	4.5	1/4-18NPT	7/16-20UNF SCREW DEPTH15

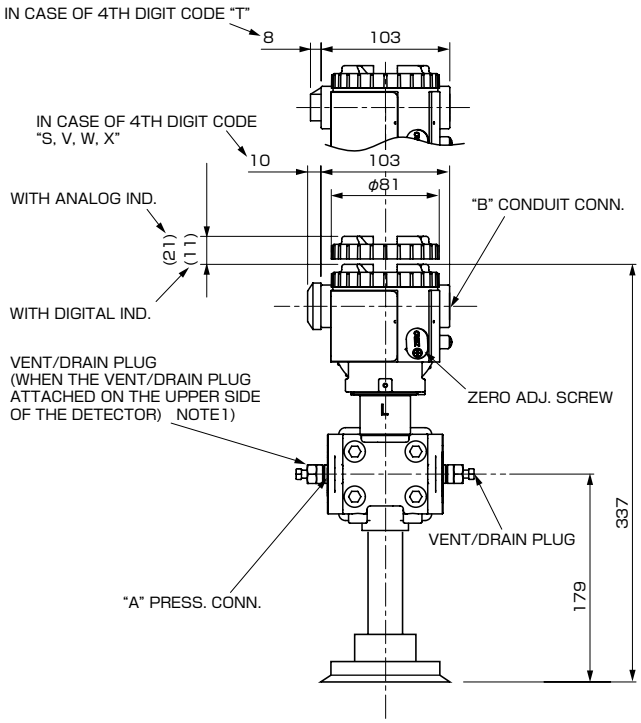

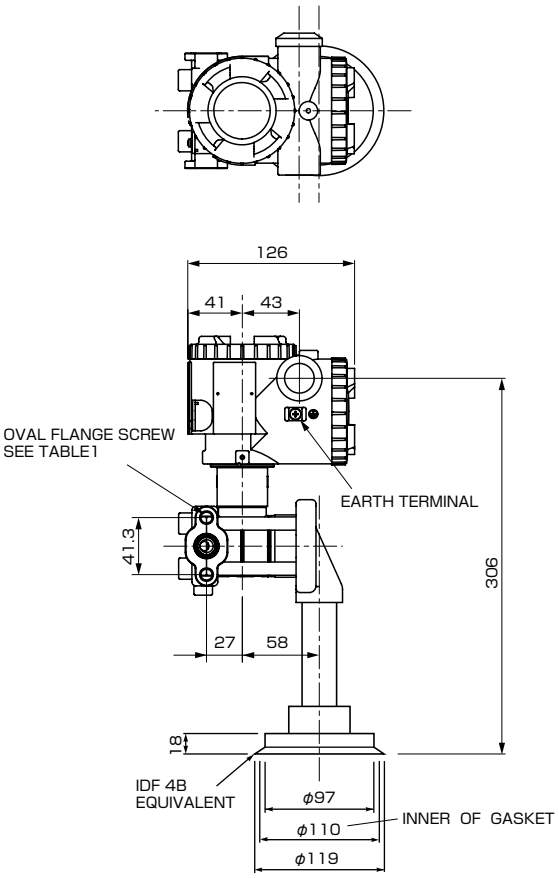

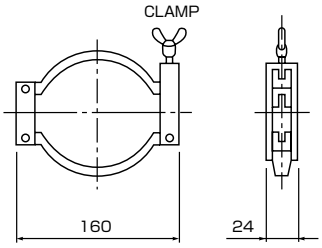

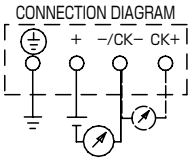

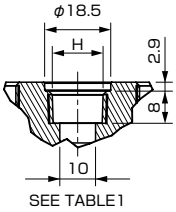

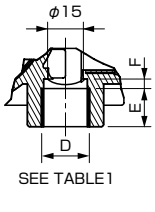

NOTE1) THE PRESSURE CONNECTOR IS LOCATED ON THE DOWN SIDE SURFACE OF THE DETECTOR, WHEN THE VENT/DRAIN PLUG IS ATTACHED ON THE UPPER SIDE OF THE DETECTOR (WHEN THE 21ST DIGIT OF THE CODE SYMBOLS : C,P).

⚠ Caution on Safety

*Before using this product, be sure to read its instruction manual in advance.

Fuji Electric Systems Co., Ltd.

International Sales Div.1
Sales Group

Gate City Ohsaki, East Tower, 11-2, Osaki 1-chome,
Shinagawa-ku, Tokyo 141-0032, Japan
http://www.fesys.co.jp/eng
Phone: 81-3-5435-7280, 7281 Fax: 81-3-5435-7425
http://www.fic-net.jp/eng