e-Front runners

Fuji Instrumentation & Control

Z Series Digital Temperature Controller

Micro Controller PXG Series

- **Auto manual operation with A/M key**
- **Universal process value input**
- **Motorized valve control**
  - ·Position feed back ·Servo control
- **Smart ramp-soak**
  - ·Profile recovery ·Profile cycling
  - ·Delayed start ·PV start
  - ·4 patterns, max 32 segments/program
  - ·Guaranteed soak
- **Password function**
- **Alarm Flicker function**

PXG

Fuji Electric Systems Co., Ltd.

ECNO:1157b

200ms sampling cycle and ± 0.3% FS

Model : PXG

Universal process value input

- Resistance bulb Pt100,
- Thermocouple (J,K,R,B,S,T,N,PL-Ⅱ)
- DC voltage (1-5V,0-5V, 0-10V,2-10V,0-100mV)

Remote-SV input

DC voltage (1-5V,0-5V)

Position feedback input

100ohmes to 2.5k ohmes

Digital input (Max 5 points)

Transmitter power supply (PXG9 only)

PV/SV light out

Control-output (5types)

- Relay contact
- SSR/SSC drive
- DC0-20mA/DC4-20mA
- DC0-5V/1-5V/0-10V/2-10V
- Motor-operated valve manipulating

Digital output

Relay contact : 3 points

Open collector: 2 points

RS485 modbus communication function

communication speed: Max. 19200bps

PC loader interface and software through RS-232C Communication

PID palette (for 8 combinations)

Smart Ramp-soak

1 Maximum 32 segments/program (Increasing from 8 steps to 16 steps)

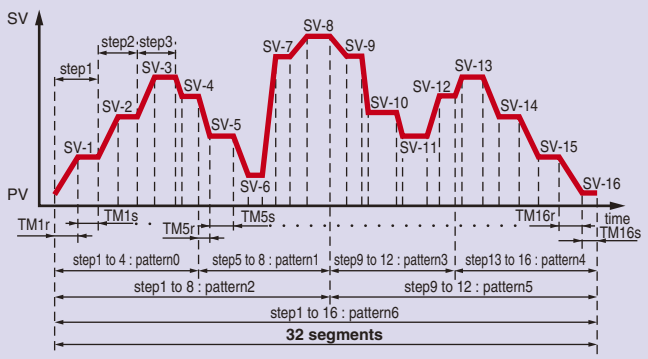

- The number of steps has been increased from 8 to 16.
- 16 steps can be used in 7 patterns.
  ptn0:step1 to 4, ptn1:step5 to 8,
  ptn2:step1 to 8, ptn3:step9 to 12
  ptn4:step13 to 16, ptn5:step9 to 16
  ptn6:step1 to 16

2 Guaranteed soak

This function guaranteed the soak time.
Only soak time within the specified range of temperature for SV is counted towards soak time.

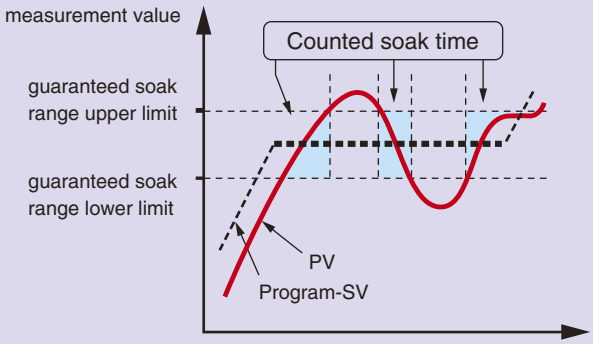

3 PV start

- When beginning ramp soak,
  Controller searches for the starting Program-SV the equal PV
  Then, ramp soak will begin to run from the first detected point.

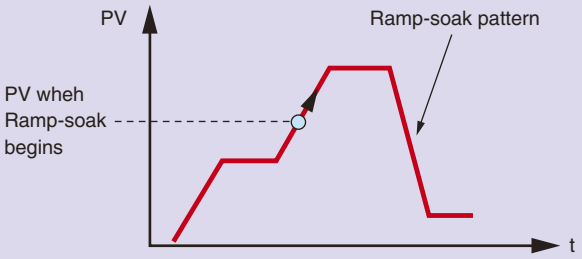

4 Continuous mode

- You can select the restart mode of Ramp-soak when the power failure returns.

TYPE	Action
Reset	Ramp soak will Reset.
Continuous	Ramp soak will restart from the Time when blacking out.
Initial start	When main power is restored ramp/soak start from first segment of selected pattern.

5 Delayed start function

This function is useful for manufacturing process.

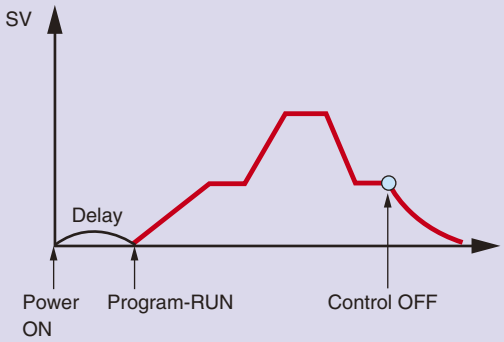

6 Abundant digital inputs

5 digital inputs are available.
This function is useful combination with PLC and timer and so on.

DI	DO
OFF	G. S.
RUN	END
HOLD	Seg 3
A/M	Seg 5
AT	Seg 9

Application example

1 Re-Transmission Output

Averaging Temperature in Furnace

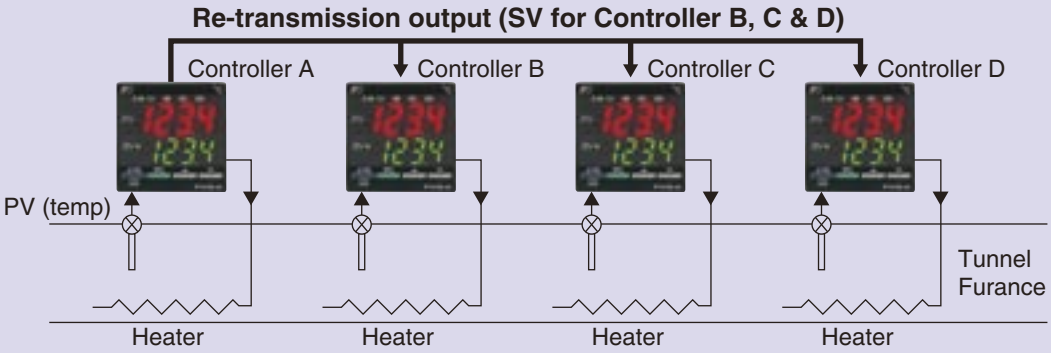

The PV of Controller A shall be treated as SV for other controller B, C & D so that the temperature in tunnel furnace can be equalized.

2 Soft Start Function

Plastic Extrusion Machine

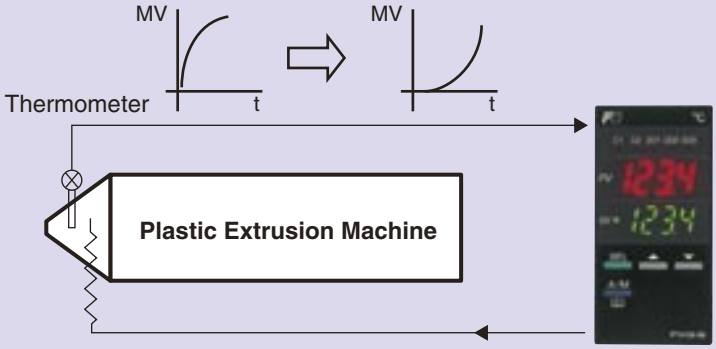

To protect nozzle material at turning on power of the machine, immediate heating the nozzle shall be with soft start function.

3 PID palette

PID Palette and SV select

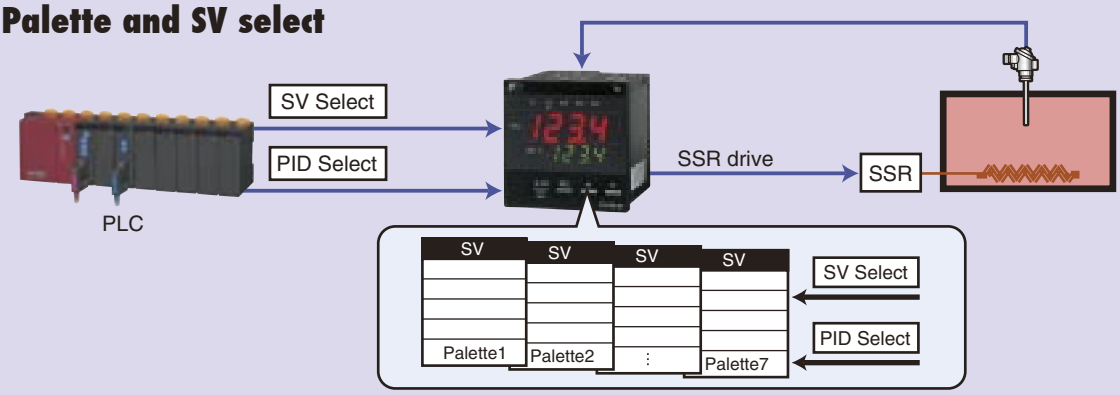

4 Servo control and PFB control

PXG is available for both Servo control and position feedback (PFB) control.
ex. Combustion control.
(Burner and Boiler

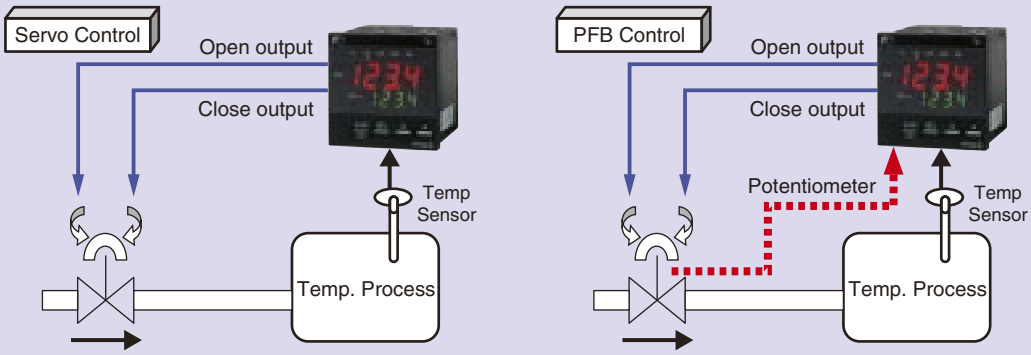

Ordering code

●PXG4 (Standard type)

PXG 4 ☐☐☐☐ - ☐☐☐☐☐

Digit	Specifications	Note	Code
4	<Front panel size W × H>		
	48 × 48mm		4
5	<Output 1>		
	Relay contact		A
	SSR drive		C
	Current (0 to 20 mA DC/4 to 20 mA DC)	Note1	E
	Voltage (0 to 5 V DC/1 to 5 V DC/0 to 10 V DC/2 to 10 V DC)	Note1	P
6	<Output 2>		
	None		
	Relay contact	Note2 Note4	Y
	SSR drive	Note2 Note4	A
	Current (0 to 20 mA DC/4 to 20 mA DC)	Note2 Note4	C
	Voltage (0 to 5 V DC/1 to 5 V DC/0 to 10 V DC/2 to 10 V DC)	Note2 Note4	E
	Re-transmission output, current (0 to 20 mA DC/4 to 20 mA DC)	Note2 Note4	P
	Re-transmission output, voltage (0 to 5 V DC/1 to 5 V DC/0 to 10 V DC/2 to 10 V DC)	Note2 Note4	R S
7	<Option 1>		
	None		
	RS485		Y
	Digital input (No.1) + Digital input (No.2)		M
	Digital input (No.1) + RSV1		T
	Digital input (No.1) + CT1	Note1 Note3	H
	RS485 + Digital input (No.1)		G
	RS485 + RSV1		V
	RS485 + CT1	Note1 Note3	K
	RS485 + Digital input (No.1) + RSV1	Note4	J
	Digital input (No.1) + RSV1 +Digital input (No.2)	Note4	F 2
8	<Revision symbol>		1
9	<Digital output> (relay contact output)	Note3	
	None		0
	digital output 1 point (No.1)		1
	digital output 2 points (No.1,2)	Note2	F
	digital output 3 points (No.1,2,3)		M
	digital output 2 points [independent common] (No. 1, 2)		J
10	<Power source, instruction manual>		
	100 to 240 V AC, no instruction manual		N
	100 to 240 V AC, Japanese instruction manual		Y
	100 to 240 V AC, English instruction manual		V
	24 V AC/DC, no instruction manual		C
	24 V AC/DC, Japanese instruction manual		A
	24 V AC/DC, English instruction manual		B
11	<Option 2>		
	None		Y
12 13	<Special code>		
	Standard		0 0
	Special codes prepared for shipping destination		✱ ✱

Note 1: If output 1 was for current or voltage output, option cannot be assigned to CT1.
(If 7th digit was assigned to G or J, 5th digit cannot be assigned to E nor P.)

Note 2: If output 2 was for relay contact, SSR drive, current, voltage or retransmission output, 3 digital outputs cannot be assigned.
(If 6th digit was assigned to A, C, E, P, R or S, 9th digit cannot be assigned to M.)

Note 3: If CT1 was selected in option 1, None in <Digital output> cannot be assigned.
(If 7th digit was assigned to G or J, 9th digit cannot be assigned to 0.)

Note 4: If RSV1 in option 1 and digital input 1 were selected simultaneously, output 2 cannot be assigned.
(If 7th digit was assigned to F or 2, 6th digit cannot be assigned to A, C, E, P, R nor S.)

●PXG5/PXG9 (Standard type)

PXG ☐☐☐☐ - ☐☐☐☐☐

Digit	Specifications	Note	Code
4	<Front panel size W × H>		
	48 × 96mm		5
	96 × 96mm		9
5	<Output 1>		
	Relay contact		A
	SSR drive		C
	Current (0 to 20 mA DC/4 to 20 mA DC)	Note1	E
	Voltage (0 to 5 V DC/1 to 5 V DC/0 to 10 V DC/2 to 10 V DC)	Note1	P
6	<Output 2>		
	None	Note3	
	Relay contact	Note3	Y
	SSR drive	Note3	A
	Current (0 to 20 mA DC/4 to 20 mA DC)	Note3	C
	Voltage (0 to 5 V DC/1 to 5 V DC/0 to 10 V DC/2 to 10 V DC)	Note3	E
	Re-transmission output, current (0 to 20 mA DC/4 to 20 mA DC)	Note3	P
	Re-transmission output, voltage (0 to 5 V DC/1 to 5 V DC/0 to 10 V DC/2 to 10 V DC)	Note3	R S
	Transmitter power supply	Note6	T
7	<Option 1>		
	None		
	RS485		Y
	Digital input (No.1) + Digital input (No.2)		M
	Digital input (No.1) + RSV1	Note2	T
	Digital input (No.1) + CT1	Note1 Note4 Note5	H
	RS485 + Digital input (No.1)		G
	RS485 + RSV1	Note2	V
	RS485 + CT1	Note1 Note4 Note5	K
	RS485 + Digital input (No.1) + RSV1	Note3	J
	Digital input (No.1) + RSV1 +Digital input (No.2)	Note3	F 2
8	<Revision symbol>		1
9	<Digital output> (relay contact output)	Note4	
	None		0
	Digital output 1 point (No.1)		1
	Digital output 2 points (No.1,2)		F
	Digital output 3 points (No.1,2,3)		M
	Digital output 2 points [independent common] (No. 1, 2)		J
10	<Power source, instruction manual>		
	100 to 240 V AC, no instruction manual		N
	100 to 240 V AC, Japanese instruction manual		Y
	100 to 240 V AC, English instruction manual		V
	24 V AC/DC, no instruction manual		C
	24 V AC/DC, Japanese instruction manual		A
	24 V AC/DC, English instruction manual		B
11	<Option 2>		
	None	Note1 Note4 Note5	Y
	Digital input (No.3,4,5) + CT2		A
	Digital input (No.3,4,5)		B
	Digital input (No.3,4,5) + digital output (No.4,5) [transistor output]	Note2	C
	Digital input (No.3,4,5) + RSV2		D
12 13	<Special code>		
	Standard		0 0
	Special codes prepared for shipping destination		✱ ✱

Note 1: If output 1 was for current or voltage output, option cannot be assigned to CT1 nor CT2.
(If 7th digit was assigned to G or J, or 11th digit to A, 5th digit cannot be assigned to E nor P.)

Note 2: RSV1 in option 1 and RSV2 in option 2 cannot be assigned simultaneously.
(If 7th digit was assigned to H or K, 11th digit cannot be assigned to D.)

Note 3: In case, in option 1, of DI 2 points + RSV1 or RS485 + DI 1 + RSV1, output 2 cannot be assigned.
(If 7th digit was assigned to F or 2, 6th digit cannot be assigned to A, C, E, P, R, nor S.

Note 4: In case of CT1 in option 1, or CT2 in option 2, digital output cannot be assigned to None.
(If 7th digit was assigned to G or J, or 11th digit to A, 9th digit cannot be assigned to 0.)

Note 5: CT1 in option 1 and CT2 in option 2 cannot be selected simultaneously.
(If 7th digit was assigned to G or J, 11th digit cannot be assigned to A.)

Note 6: Transmitter power supply is only for PXG9.

●PXG4 (Motor-operated valve control type)

PXG 4 ☐☐☐☐ - ☐☐☐☐☐

Digit	Specifications	Note	Code
4	<Front panel size W × H>		
	48 × 48mm		4
5	<Output 1>		
	Motorized valve control output (Without PFB)	Note1	S
6	<Output 2>		
	None		Y
7	<Option 1>		
	None		
	Digital input (No.1) + RSV1		Y
	Digital input (No.1,2,3)		H
	RS485 + Digital input (No.1)		D
	RS485 + RSV1		V
			K
8	<Revision symbol>		1
9	<Digital output> (relay contact output)		
	None		0
	digital output 1 point (No.1)		1
	digital output 2 points (No.1,2)		F
	digital output 2 points [independent common] (No. 1, 2)		J
10	<Power source, instruction manual>		
	100 to 240 V AC, no instruction manual		N
	100 to 240 V AC, Japanese instruction manual		Y
	100 to 240 V AC, English instruction manual		V
	24 V AC/DC, no instruction manual		C
	24 V AC/DC, Japanese instruction manual		A
	24 V AC/DC, English instruction manual		B
11	<Option 2>		
	None		Y
12 13	<Special code>		
	Standard		0 0
	Special codes prepared for shipping destination		✱ ✱

Note 1: If front panel size is 48 × 48, position feedback input (PFB input) function is not available.

●PXG5/PXG9 (Motor-operated valve control type)

PXG ☐☐☐☐ - ☐☐☐☐☐

Digit	Specifications	Note	Code
4	<Front panel size W × H>		
	48 × 96mm		5
	96 × 96mm		9
5	<Output 1>		
	Motorized valve control output (Without PFB)		S
	Motorized valve control output (With PFB)		V
6	<Output 2>		
	None		
	Auxiliary Digital output		Y
	Transmitter power supply	Note1	A T
7	<Option 1>		
	None		
	Digital input (No.1,2,3) + RSV1		Y
	RS485 + Digital input (No.1,2,3)		E
	RS485 + Digital input (No.1) + RSV1		U
			F
8	<Revision symbol>		1
9	<Digital output> <relay contact output>		
	None		0
	Digital output 1 point (No.1)		1
	Digital output 2 points (No.1,2)		F
	Digital output 3 points (No.1,2,3)		M
	Digital output 2 points [independent common] (No. 1, 2)		J
10	<Power source, instruction manual>		
	100 to 240 V AC, no instruction manual		N
	100 to 240 V AC, Japanese instruction manual		Y
	100 to 240 V AC, English instruction manual		V
	24 V AC/DC, no instruction manual		C
	24 V AC/DC, Japanese instruction manual		A
	24 V AC/DC, English instruction manual		B
11	<Option 2>		
	None		Y
12 13	<Special code>		
	Standard		0 0
	Special codes prepared for shipping destination		✱ ✱

Note 1: Transmitter power supply is only PXG9.

Specifications

General	Size and Mass	48x48x78.8mm, 0.2kg 48x96x80mm , 0.3kg 96x96x81.5mm, 0.3kg
	Power supply	AC100(-15%) - 240V(+10%), 50/60Hz AC 24V(±10%), DC24V(±10%), 50/60Hz
	Power consumption	12VA or Less
	External terminal	Screw terminal (M3)
Input	Measuring value input	Sampling cycle : 200ms (300ms at position feedback control) Input type : Universal input, thermocouple, resistance bulb mV, voltage, current
	Digital input	Number of input : Up to 5 points (up to 3 points for motor-operated valve manipulating output)
Function	Control method	PID control with 8 palette Motor-operated valve control with/without position feedback
	Control mode	Auto/Manual/Remote
	Alarm output	Up to 5 points
	Memory back-up	by non-volatile memory
Indication	Accuracy	±0.3%FS
	PV indicator	LED 7 segments 4 digit (Red color)
	SV indicator	LED 7 segments 4 digit (Geen color)
	Indication status	6 indicator lamps
output	Control output	Up to 2 points (heating and cooling control if 2 points) 1. Relay contact output Contact structure : 1 NO (SPST) contact Contact rating : AC220V/DC30V, 3A (Resistive load) AC220V/DC30V, 1A (Inductive load) 2. SSR/SSC drive output DC20V (DC18-24V)/Max current 20mA Load resistance : 850ohms MIN 3. DC0-20mA/DC4-20mA output Accuracy : ±5% FS Linearity : ±5% FS Load resistance : 600ohms MAX 4. Voltage output DC0-5V/DC1-5V/DC0-10V/DC2-10V 5. Motor-operated valve manipulating output Contact structure : 2 NO (SPST) contacts Contact rating : AC220V/DC30V, 1A Mechanical life : 20 million operations MIN Electrical life : 100,000 operations MIN Output interlock/Output interlock circuit : Provided Except for PXG4
	Re-transmission output	Current output : (DC0-20mA, DC4-20mA) Voltage output : (DC0-5V/DC1-5V/DC0-10V/DC2-10V) Output type : PV, SV, MV, DV, PFB
	Digital output	Number of outputs : Max.5 points Contact structure : 1 NO (SPST) contact/Open collecter Contact rating : AC220V/DC30V, 1A/DC30V, 100mA
	Transmitter power supply For PXG9	DC24V(DC19.5-24V) Max current : 21.6mA, 400ohms
RS232C communication (Loader port interface)	Protocol	Modbus-RTU
	Speed	9600bps
RS485 communication(Option)	Protocol	Modbus-RTU
	Speed	9600bps, 19200bps
Applied standards		UL, CE Mark

Outline Diagram and Panel Cut (Unit:mm)

Model	Outline	Panel Cut
PXG4	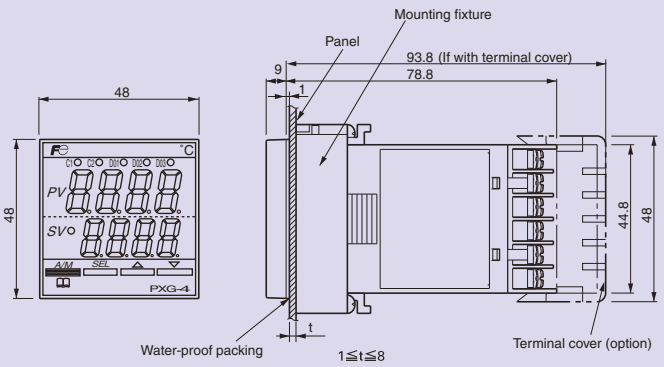	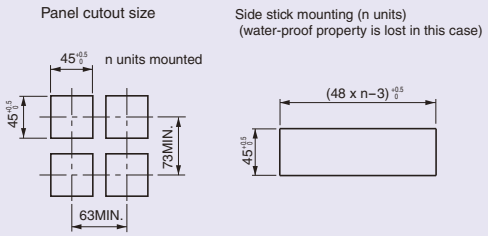
PXG5	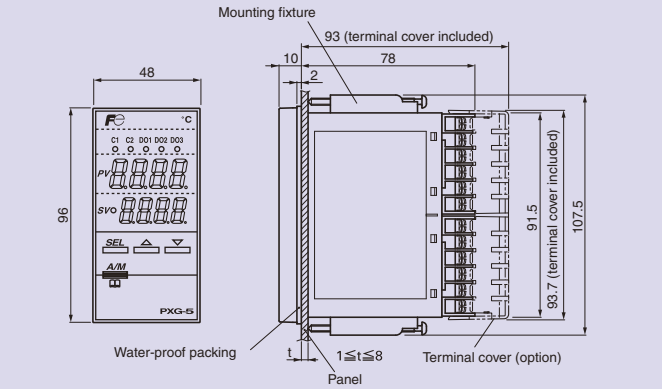	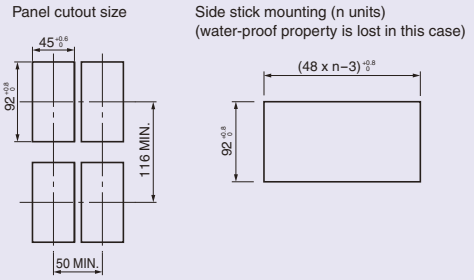
PXG9	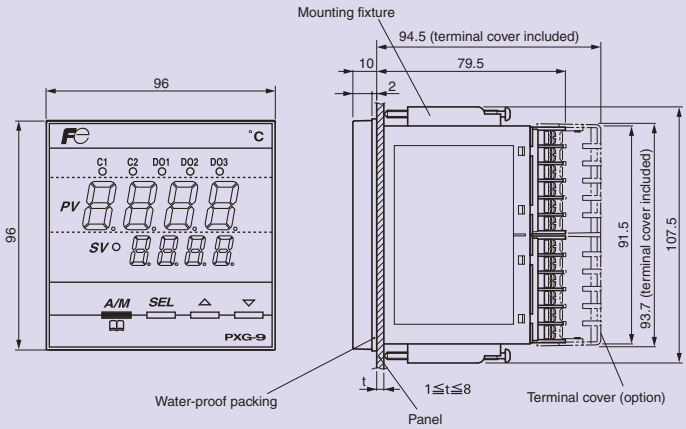	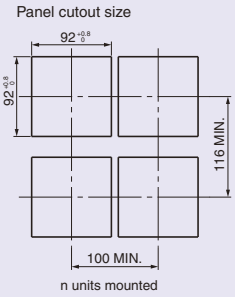

⚠ Precautions for use

To ensure temperature process safety in case of PXG's failure, fit a separate over-temperature protection unit to isolate the heating circuit.
Uncontrollability due to such failure may cause major accident.

Fuji Electric Systems Co., Ltd.

Head Office
Gate City Ohsaki, East Tower,
11-2, Osaki 1-chome, Shinagawa-ku, Tokyo 141-0032, Japan
http://www.fesys.co.jp/eng

Instrumentation Div.
International Sales Dept.
No.1 , Fuji-machi, Hino-city, Tokyo,191-8502 Japan
Phone : 81-42-585-6201,6202
Fax : 81-42-585-6187
http://www.fic-net.jp/eng

Information in this catalog is subject to change without notice.

Printed in Japan 2005-12/30FIS